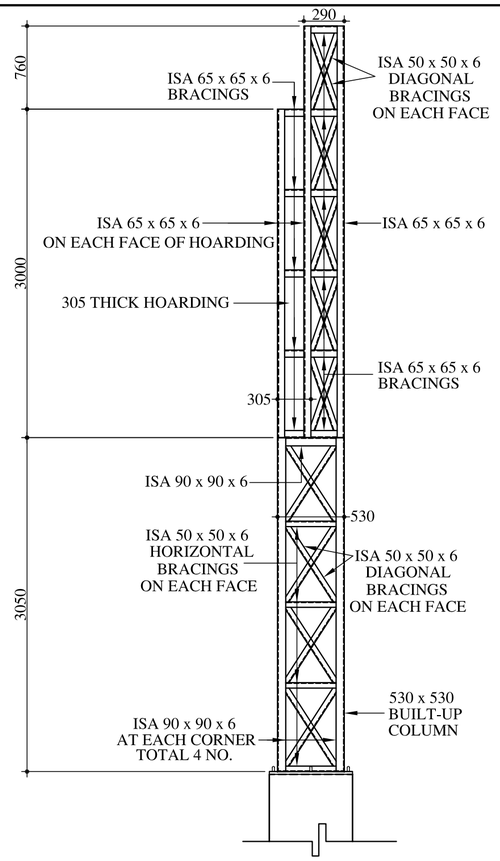

SECTION "A - A"
(SCALE:- 1 : 40)

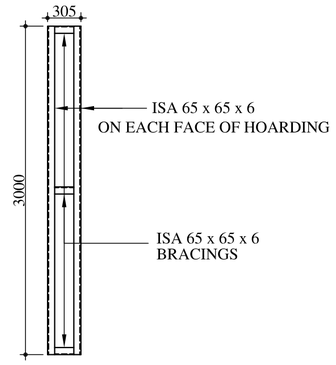

SECTION "C - C"
(SCALE:- 1: 40)

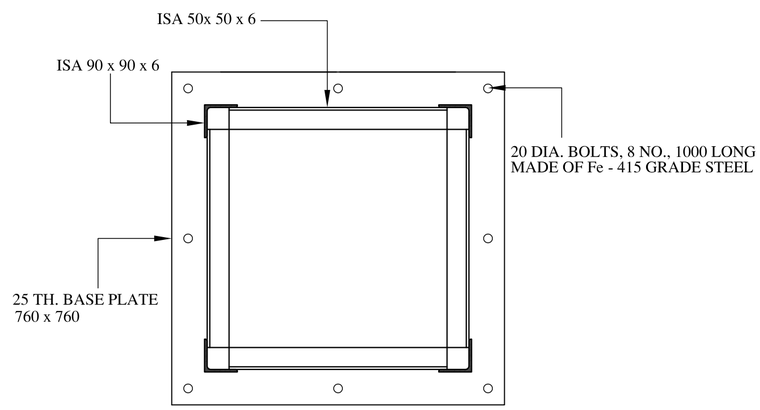

SECTION "B - B"
(SCALE:- 1:10)

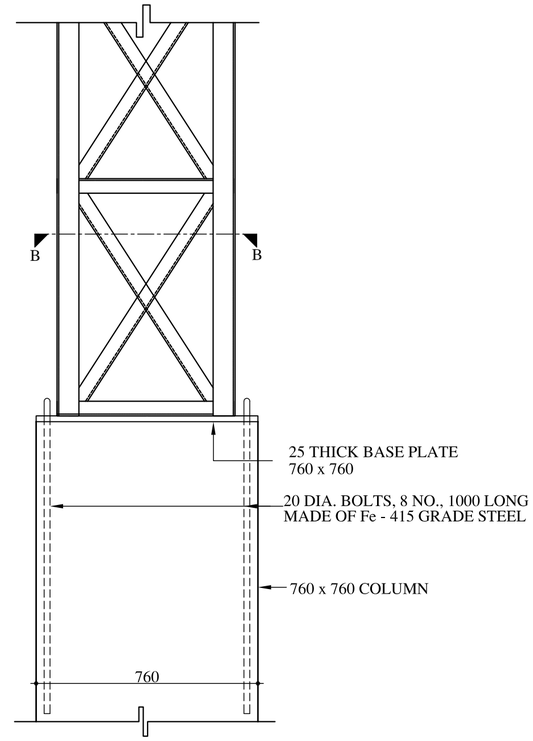

DETAIL " A "
(SCALE:- 1:15)

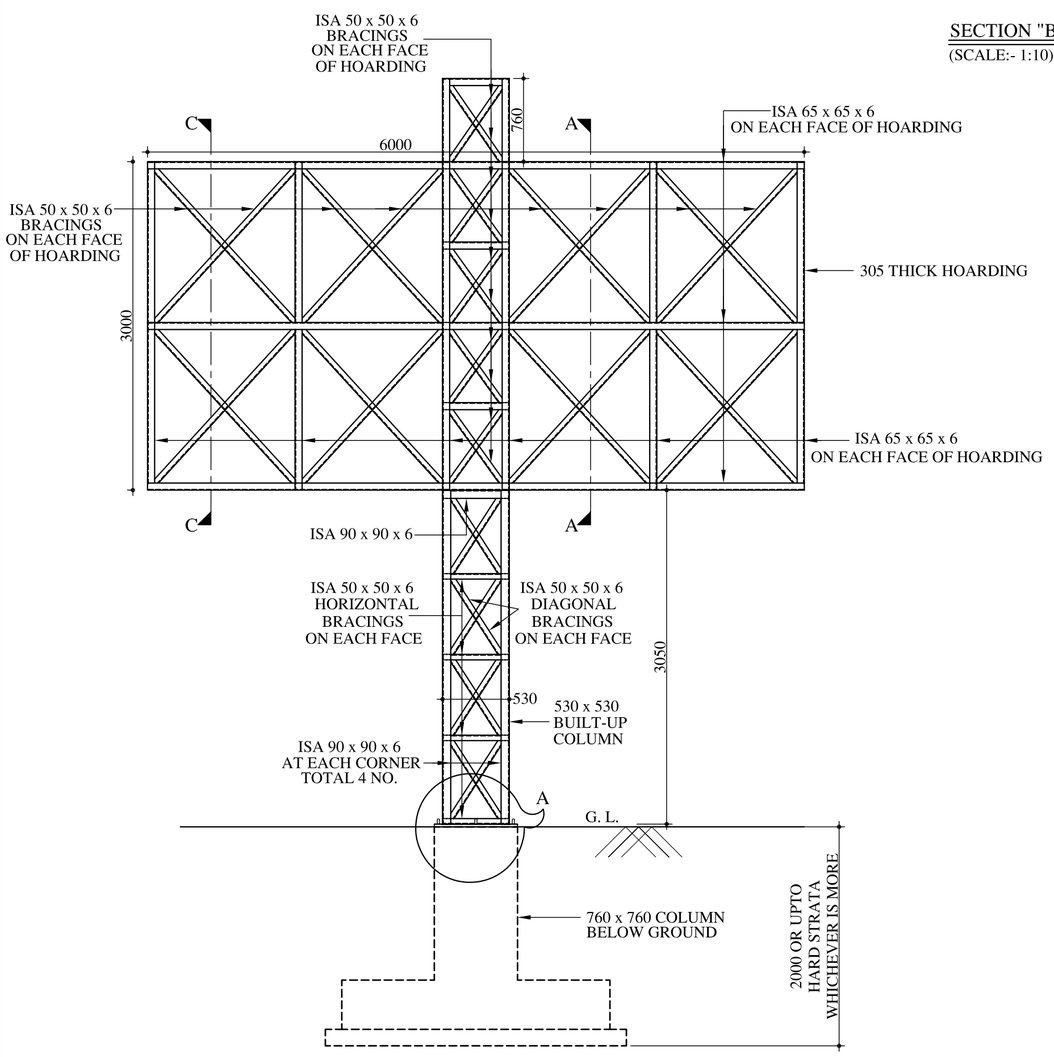

ELEVATION
(SCALE:- 1:40)

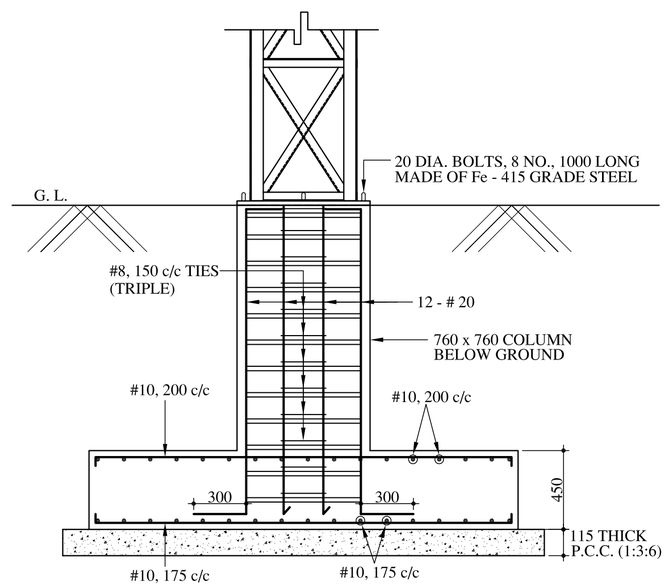

SECTION "X - X"

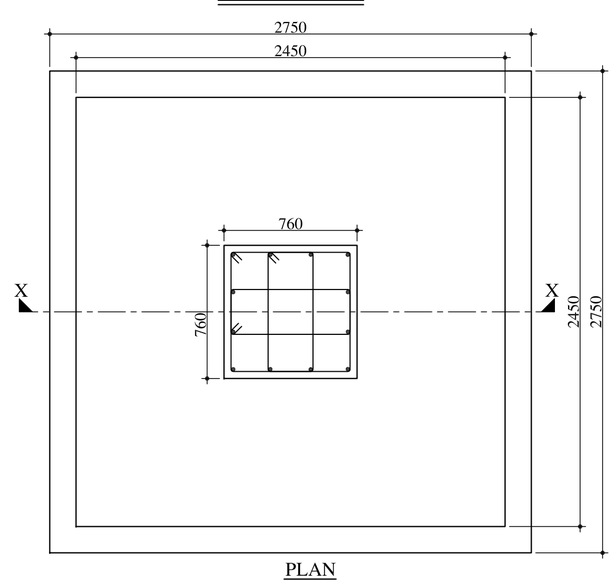

PLAN

DETAIL FOR R. C. COLUMN
(SCALE:- 1:25)

NOTES:-

1) ALL DIMENTIONS ARE IN mm
2) CONCRETE MIX M-25 CONFORMING TO IS:456-2000, SHALL BE USED UNLESS SPECIFIED OTHERWISE.
3) CLEAR COVER TO REINFORCEMENT IN,
   A) FOOTINGS = 50
   B) COLUMN = 40
   SHALL BE PROVIDED.
4) CONCRETE SHALL BE MACHINE MIXED, MACHINE VIBRATED AND SHALL BE CONSTANTLY WET FOR SEVEN DAYS AFTER DATE OF PLACING.
5) FOR CONCRETING OF ANY COMPONENT, FREE FALLING HEIGHT FOR CONCRETE SHALL NOT BE MORE THAN 1.5 m.
6) Ø INDICATES MILD STEEL BARS CONFORMING IS:432-1982 OR EQUIVALENT.
7) # INDICATES HIGH YIELD STRENGTH DEFORMED BARS CONFORMING TO IS:1786-1985 OR EQUIVALENT.
8) ALL STRUCTURAL STEEL ROLLED SECTIONS AND PLATES SHALL CONFORM TO IS : 226 - 1975 AND IS : 2062 - 1984
9) WELDING SHALL CONFORM TO IS : 816 - 1969
10) ALL ELECTRODES SHALL CONFORM TO IS : 814 (PART - I) - 1974
11) ALL M.S. FITTED BOLTS AND NUTS SHALL CONFORM TO IS : 3694 - 1982
12) WASHERS SHALL CONFORM TO IS : 5369 - 1975, IS : 5370 - 1969, IS : 5372 - 1975 OR IS : 5374 - 1975
13) 6 mm FILLET WELD IS TO BE USED FOR WELDING.
14) DIMENSIONS ARE TO BE READ AND NOT MEASURED.
15) ANY DISCREPANCY SHALL BE BROUGHT TO THE NOTICE OF THE ENGINEER IN CHARGE, BEFORE FURTHER PROGRESS OF THE WORK.

REV. NO.	REV. DATE	REVISION DETAILS	APPD. BY

	NAME	SIGN	DATE
DRAWN BY:-			
CHECKED BY:-			
APPROVED BY:-			

PRINCIPAL CLIENT :-

ARCHITECT:-

PROJECT TITLE:-

DRG. NO.

DRAWING TITLE:-
STRUCTURAL DETAILS FOR BACKLIT TYPE HOARDING

LAKHLANI ASSOCIATES
CIVIL AND STRUCTURAL ENGINEERS
SHREE SOCIETY MAIN ROAD
Nr. SURYAMUKHI HANUMAN TEMPLE
NANA MAVA MAIN ROAD
NEXT TO VIVEKANAND SCHOOL
RAJKOT - 360 001
PHONE : +91 281 247 51 60
E-mail : contact@lakhlani.com
Web : www.lakhlani.com