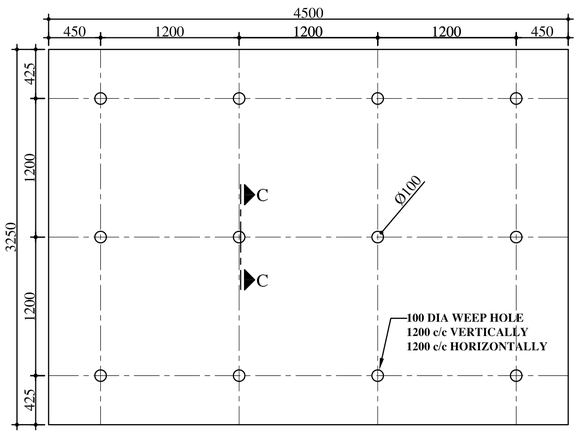

ELEVATION SHOWING LOCATION OF WEEP HOLES IN WALLS
(SCALE:- 1:35)

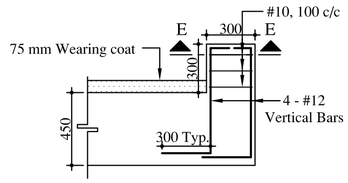

TYPICAL DETAIL FOR KERB BLOCK
(SCALE:- 1:25)

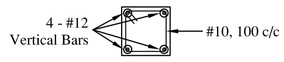

SECTION "E - E"
(SCALE:- 1:25)

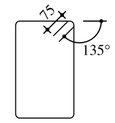

TYPICAL HORIZONTAL STIRRUPS DETAILS

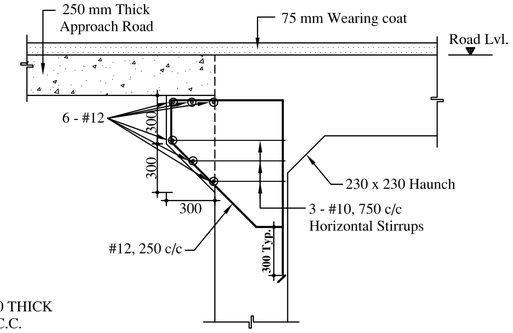

TYPICAL DETAIL FOR CORBEL BRACKET

DETAIL AT "Y"
(SCALE:- 1:25)

NOTE:- BOX CULVERT REINFORCEMENT
NOT SHOWN FOR CLARITY

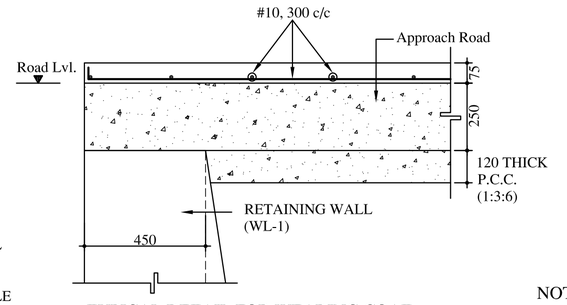

TYPICAL DETAIL FOR WEARING COAT

DETAIL AT "X"
(SCALE:- 1:15)

NOTE:- RETAINING WALL REINFORCEMENT
NOT SHOWN FOR CLARITY

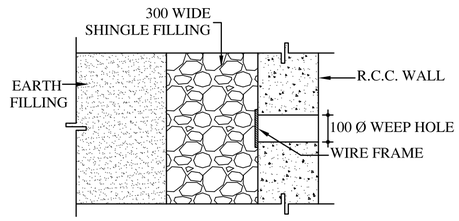

SECTION "C - C"
(SCALE:- 1:15)

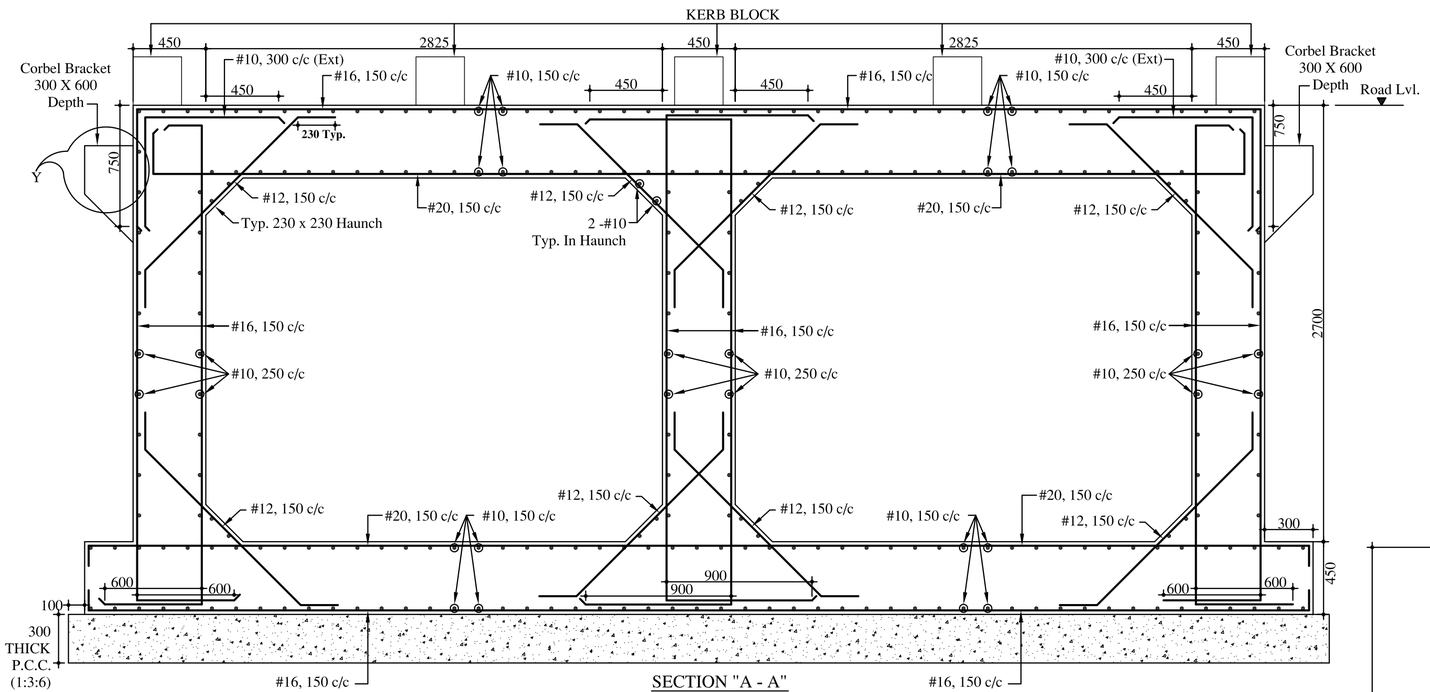

SECTION "A - A"
(SCALE:- 1:25)

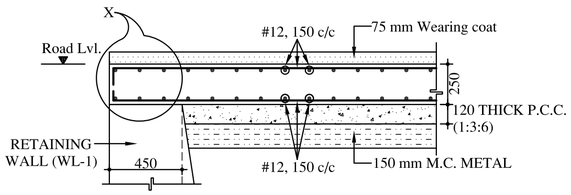

TYPICAL DETAIL FOR APPROACH ROAD

SECTION "D - D"
(SCALE:- 1:25)

NOTE:- RETAINING WALL REINFORCEMENT
NOT SHOWN FOR CLARITY

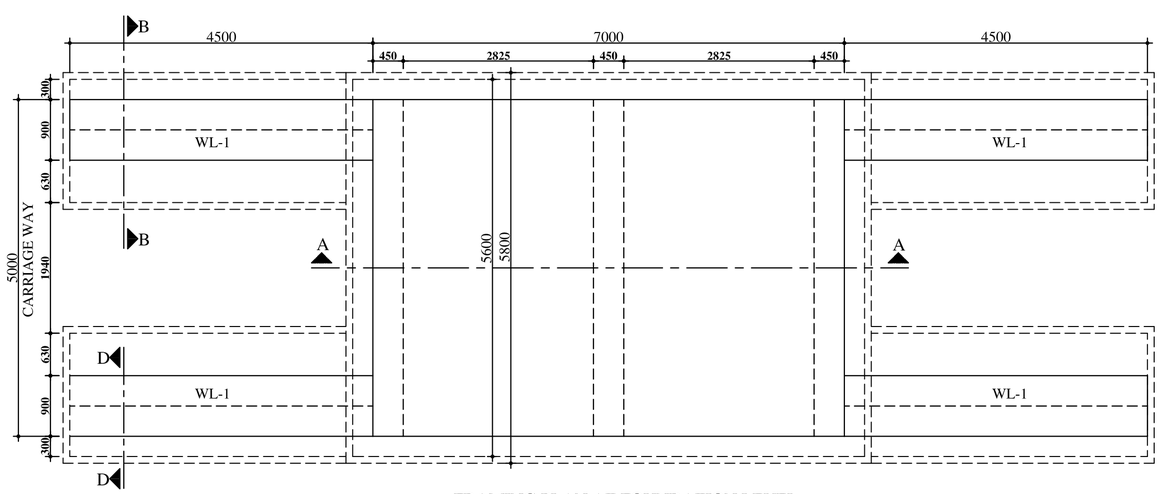

FRAMING PLAN AT FOUNDATION LEVEL
(SCALE:- 1:60)

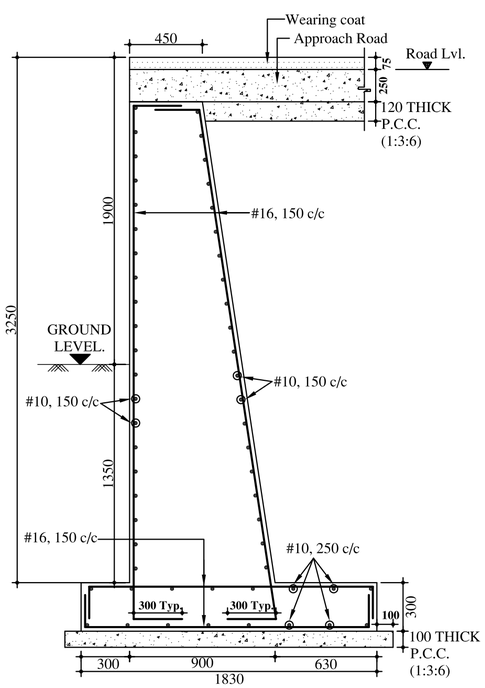

SECTION "B - B" (RETAINING WALL (WL-1))
(SCALE:- 1:25)

NOTES:-

1. ALL DIMENSIONS ARE IN mm
2. DIMENSIONS ARE TO BE READ AND NOT TO BE MEASURED
3. CLEAR COVER TO MAIN REINFORCEMENT IN
   A) BOTTOM SLAB = 75 mm
   B) WALL = 40 mm
   C) TOP SLAB = 40 mm
   D) BEAM = 40 mm
4. CONCRETE GRADE M25 FOR TOP SLAB, M20 FOR BOTTOM SLAB AND BRIDGE WALL, M15 FOR RETAINING WALL, CONFORMING TO IS : 456 - 2000, IS TO BE USED, UNLESS SPECIFIED OTHERWISE.
5. CONCRETE SHALL BE MACHINE MIXED, MACHINE VIBRATED AND SHALL BE CONSTANTLY WET FOR SEVEN DAYS AFTER DATE OF PLACING.
6. # INDICATES HYSD TMT BARS, OF Fe 415 GRADE, CONFORMING TO IS : 1786 - 2008
7. ANY DISCREPANCY SHALL BE BROUGHT TO THE NOTICE OF THE ENGINEER IN CHARGE, BEFORE FURTHER PROGRESS OF THE WORK.

LEGEND:- Ld = DEVELOPMENT LENGTH OF THE BAR
= 50 x DIA. OF BAR.
L = CLEAR SPAN OF THE BEAM.

REV. NO.	REV. DATE	REVISION DETAILS	APPD. BY

	NAME	SIGN	DATE
DRAWN BY:-			
CHECKED BY:-			
APPROVED BY:-			

PRINCIPAL CLIENT :-

PROJECT TITLE:-

DRG. NO.

DRAWING TITLE:-
R. C. DETAILS FOR BOX CULVERT AND RETAINING WALL

LAKHLANI ASSOCIATES
CIVIL AND STRUCTURAL ENGINEERS
SHREE SOCIETY MAIN ROAD
Nr. SURYAMUKHI HANUMAN TEMPLE
NANA MAVA MAIN ROAD
NEXT TO VIVEKANAND SCHOOL
RAJKOT - 360 001
PHONE : +91 281 247 51 60
E-mail : contact@lakhlani.com
Web : www.lakhlani.com